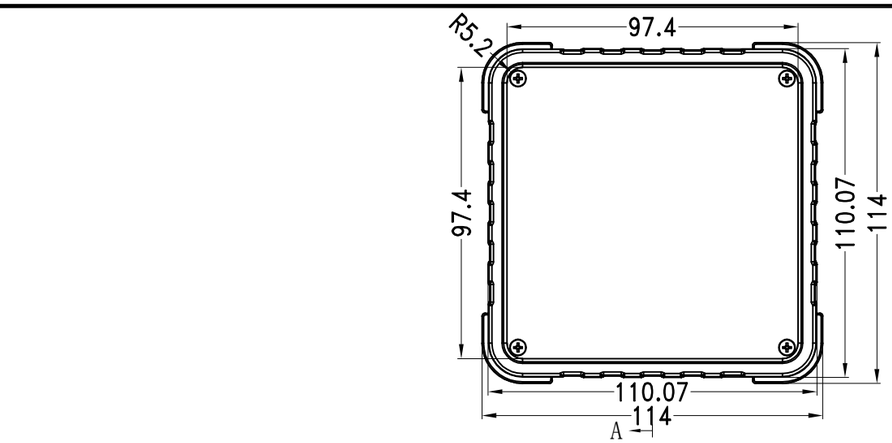

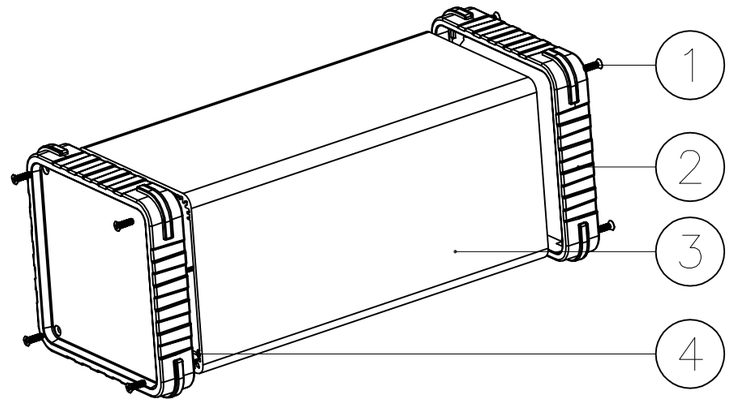

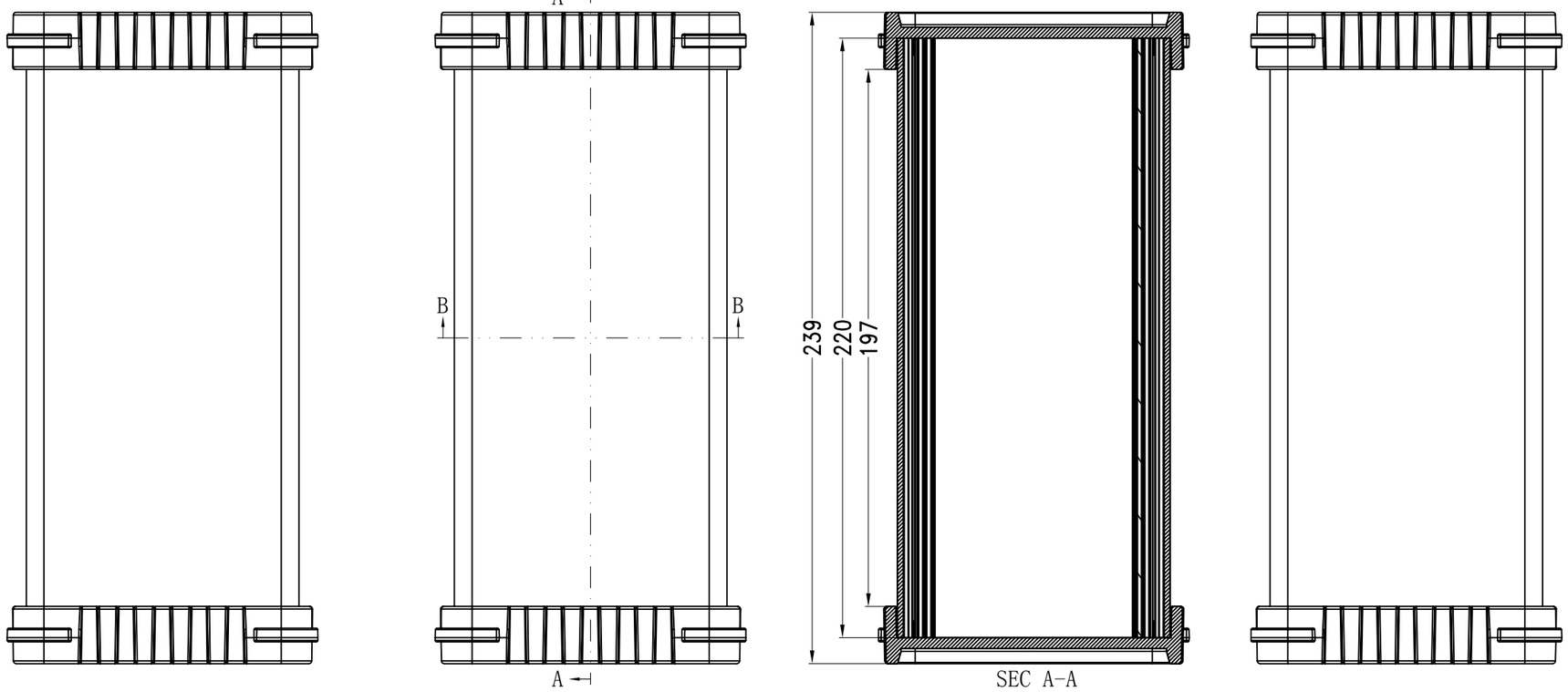

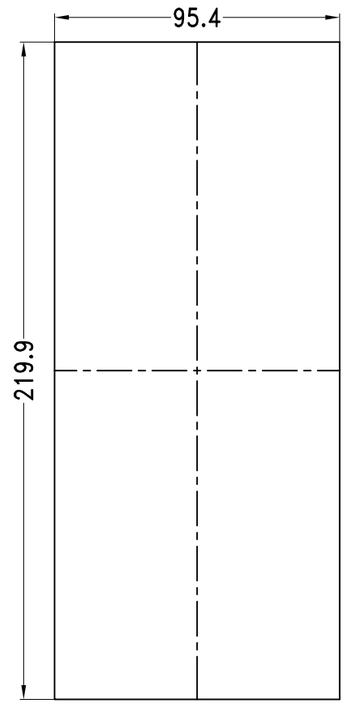

Lining plate

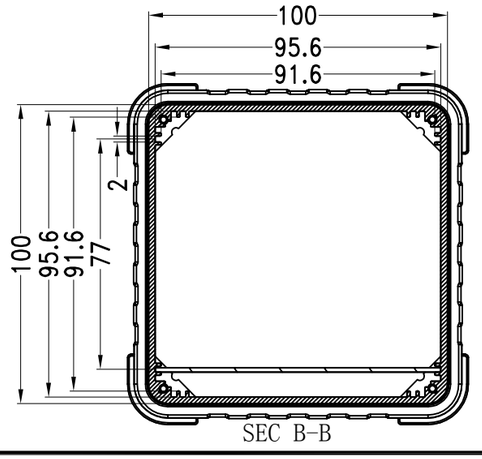

SEC B-B

4	Lining plate	AL	1	11018-C1			
3	Al profile	AL	1	11018-A1			
2	panel	PP+GF+TPE	2	11018-B1			
1	screws	STD	8	KM3.0x10			
Drawing	Auditing	Confirm	Product Name	Aluminum case	Project View		A
			Product Type	BAD 11018-C W220	Drawing Scale	1:1 (MM)	

www.bahar-enclosure.com **BAHAR ENCLOSURE GmbH**