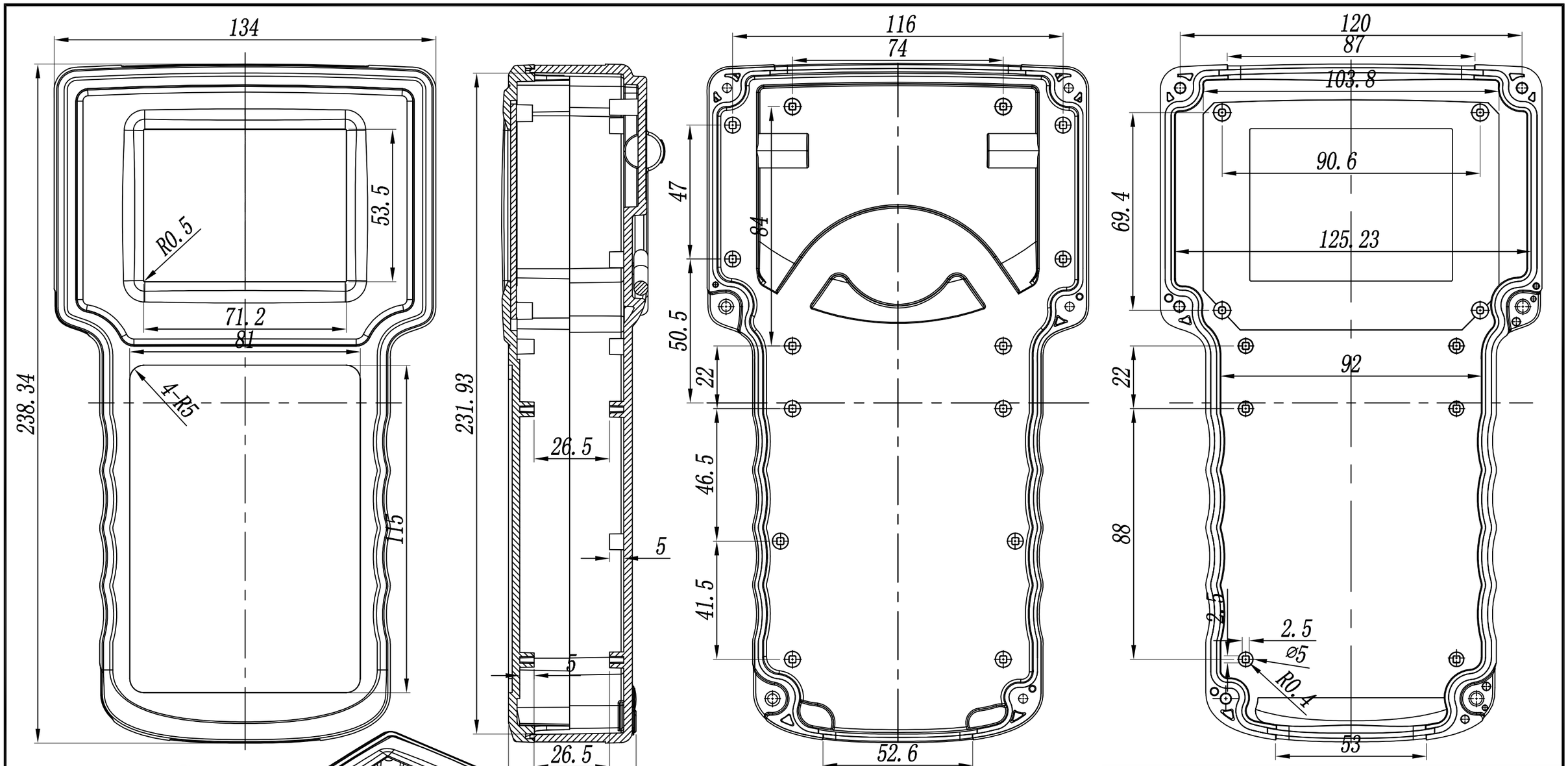

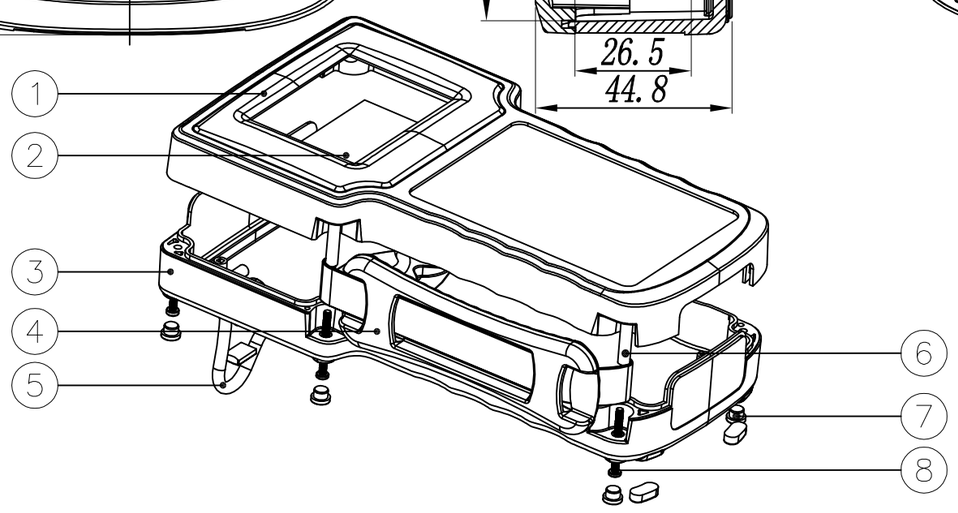

7	screws	STD	4+2	PM3*22/PM3*30			
7	foot pad	TPE	6+4	BP-9/70002-F			
6	axle sleeve	stainless steel	2	70002-E			
5	Bracket	STD	1	70002-D			
4	Protective belt	STD	1	70002-C			
3	bottom cover	ABS	1	70002-B			
2	Lens	PC	1	70002-G3			
1	Uppre cover	ABS+PC	1	70002-C1			
Drawing	Auditing	Confirm	Product Name	Hand-held Enclosure	Project View		A
			Product Type	BMC 70002-C1	Drawing Scale	1:1 (MM)	

BAHAR
www.bahar-enclosure.com

BAHAR ENCLOSURE GmbH